CRASH TEST BARRIER

Lab is due In December 8 or 9 depending on when you have physics class
Contest Due Date: January 8 -or the next day we are in class after January 8th. (Snow day? ☺)

In this contest you are to build the lightest, smallest, least expensive car crash barrier that is the most effective at slowing down a test vehicle. You are to build your barrier out of 3"x 5" index cards and staples. The test vehicle is a small cart on wheels about the size of a small shoe. The vehicle's impact speed will be set by the teacher. The vehicle is to decelerate as slowly as possible. This will be monitored via an accelerometer attached to the official test vehicle. (The test vehicle is pictured to the right. The vehicle you are given is a practice vehicle, not the official one used in the contest.)

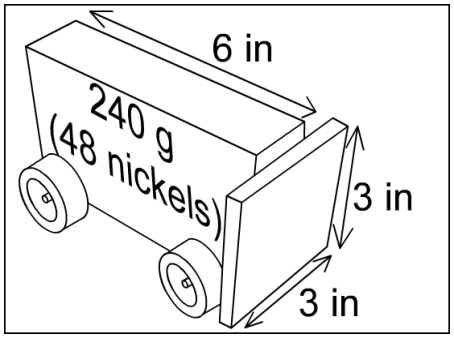

Lab Component of the project

You must do the online lab activity located at http://www.mrwaynesclass.com/teacher/Energy/StoppingDistance/home.html (Upper/lower case letters are important if you want to get to the page.) The lab can be downloaded from this page if you lost a copy.

You must also have a barrier ready for low speed testing. Your barrier will be impacted by the official test car after traveling down a 12 inch high hill. This will give it an impact velocity of 2 m/s. The deceleration of the car as it impacts your barrier will be recorded by the accelerometer. Your first design and unofficial results will be posted along with those of every other participant. Learn from these results and build a new barrier for final testing. For the final test the car will impact the barrier at 4.5 m/s. This speed is achieved by letting the car travel down a hill 1 meter high before impacting the barrier.

Contest details

In this activity you are to build a crash barrier that will allow the safest possible stop in a head-on impact with a wall with the lowest "Crash Ratio."

$$\text{Crash Ratio} = \frac{\text{Crash Rating}}{\text{Manufacturing Cost}}$$

The crash barrier you build will go between the vehicle and the wall.

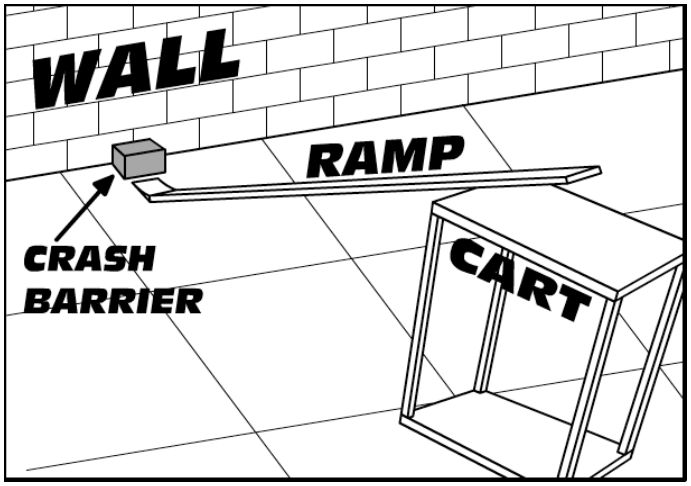

Calculating the Crash Rating

$$\text{Crash Rating} = \frac{(\text{Impact Velocity})^2}{(\text{Area in centimeters}^2) + (\text{Decelleration in g's})^2}$$

- The impact velocity is the velocity at which the car hits the barrier.
- The "Area" is the area it takes up in the floor this area consists of the largest rectangle into which the barrier can fit. Measured in centimeters^2.

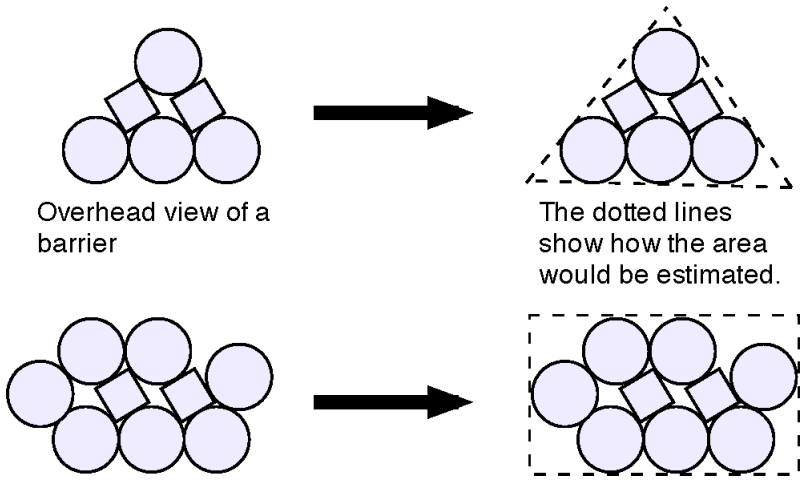

- The deceleration is measured using an accelerometer. The accelerometer only goes up to 25 g's. Any accelerations greater that 25 g's will count as 50 g's. Use kinematics to figure out the minimum stopping distance or the g's to stop your actual car. Bring in your bumper and test it out before the contest if you wish. (You know the final velocity of your car, you know the initial velocity of the car -if you use the ramps heights we provided. Measure the distance and calculate the acceleration. Or predict the stopping distance to achieve a certain acceleration.)

Bumper Construction

It must be made from 3 inch by 5 inch index cards. These cards can be folded, stapled, and cut. But just like in the manufacturing process, these items and procedures cost you. If your bumper uses any bigger card your "card costs" will be quadrupled to cover the cost of getting your additional resources on the black market and government fines for cheating on your forms. Your bumper must be free standing. It cannot be secured to the barrier or the floor.

Minimum/Maximum bumper size to qualify

The impact car may or mat not hit your car straight on. The car might swerve a little hit the bumper with a glancing blow. Regardless of how the car impacts the barrier, the trail still counts.

Maximum size depth .....< 20 cm
width.....< 30 cm
height .....< 15 cm

Failure to meet the minimum size will results in a 20% reduction in the grade.

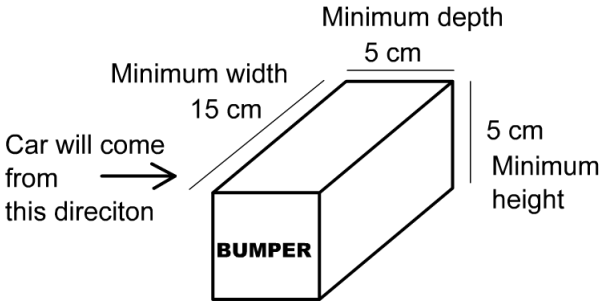

Calculating the Manufacturing Cost

As you build your bumper keep a chart of what it takes to build it. After it complete, tally up the cost according to the table. Make sure the bumper works before cutting costs.

EXAMPLE Item	Cost	Reason	Tick marks each time you use this	Total Pieces Used	Total Cost
1 index card	$3.00	Raw materials	𝍸 𝍸 𝍸 𝍸 𝍸 ||	27	$81
Fold or curving of the paper	$2.00	Labor cost	𝍸 𝍸 𝍸 𝍸 𝍸 𝍸 𝍸 𝍸 ||	42	$84
Tear or cut (any length)	$3.00	Labor and special machinery	𝍸 𝍸 𝍸 𝍸 𝍸 𝍸 |	31	$93
Staple	$1.00	Material and labor to install	𝍸 𝍸 𝍸 𝍸 𝍸	25	$25
				Total Cost	$266

EXTRA CREDIT

- **Do the 23rd annual "Turkey Shoot" contest. It's due date is to be announced later.**

This form is to be turned in with your barrier <u>every time it is tested</u>.

Name: _____

Partner's name: _____

FINAL Item	Cost	Reason	Total Pieces Used	Total Cost	These 2 columns are to be filled in by the teacher	
1 index card	$3.00	Raw materials			Area in centmeters^2 :	
Fold or curving of the paper	$2.00	Labor cost			Impact velocity	2 m/s or 4 m/s
Tear or cut (any length)	$3.00	Labor and special machinery			Deceleration in g's :	
Staple	$1.00	Material and labor to install			Crash rating:	
			Total cost of the bumper		Crash Ratio:	

$$\text{Crash Rating} = \frac{(\text{Impact Velocity})^2}{(\text{Area in centimeters}^2) + (\text{Decelleration in g's})^2}$$

… $$\text{Crash Ratio} = \frac{\text{Crash Rating}}{\text{Manufacturing Cost}}$$

In the space below, paste or draw two pictures of your barrier or one orthogonal view. The 2 pictures should show the top and front view. If you use one picture, it should CLEARLY show the top, front and side of the barrier.

Picture(s) go here